PRODUCT SPECIFICATION

TAN LEATHER EFFECT

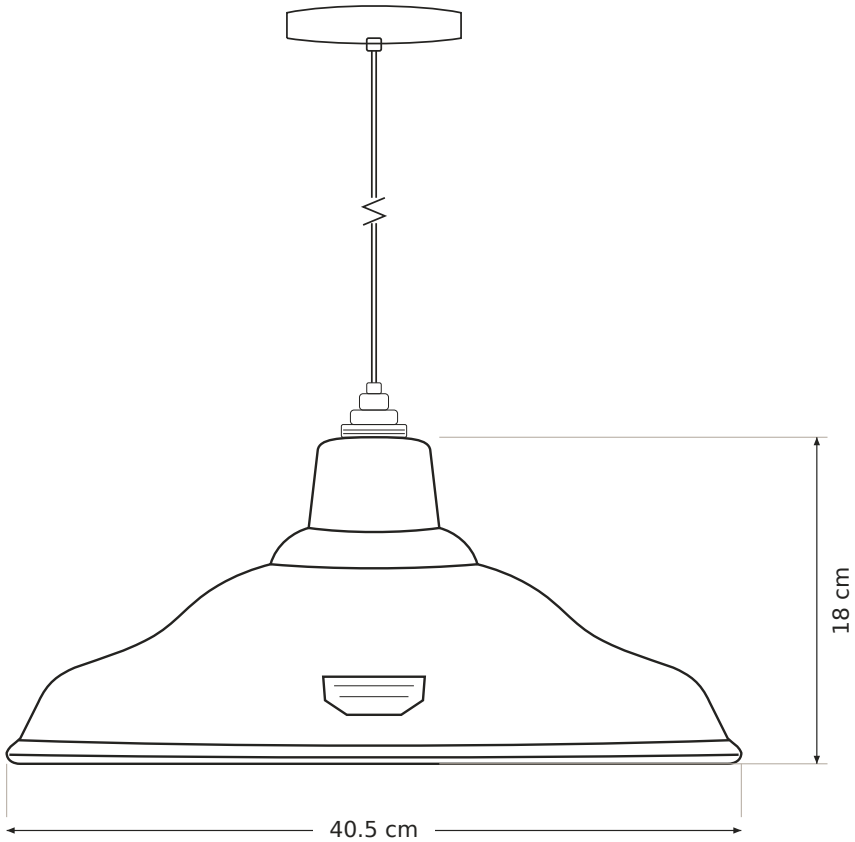

Schematic drawing - not to scale

Bawsey Tan Leather Effect Industrial Pendant Light, 16 Inch

SPECIFICATIONS

PRODUCT TYPE

Pendant lighting

BULB OPTION

Select No Bulb or add one 40W vintage filament bulb using the available options.

ADD A BULB

40W Filament Bulb / No Bulb

INFORMATION

FINISH

Tan Leather Effect

SHADE ONLY

One lampshade. Cable, lampholder and ceiling rose are not included.

SHADE & PENDANT SET

One lampshade, black vintage-style twisted cable, pre-wired bulb holder, pewter ceiling rose and ceiling fixings.

CHOOSE YOUR FITTING

Shade & Pendant Set / Shade Only

DIMENSIONS

SHADE DIAMETER

40.5 cm / 16 inches

SHADE HEIGHT

18 cm / 7 inches

LAMPHOLDER APERTURE

40 mm

PENDANT-SET LENGTH

100 cm to the bottom of the bulb holder, adjustable during installation