PRODUCT SPECIFICATION

MATT BLACK

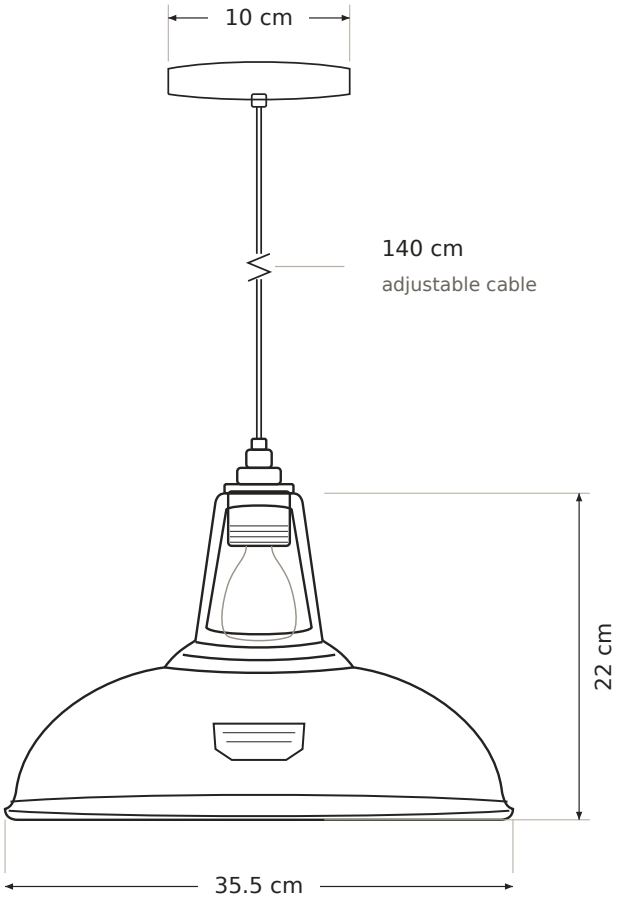

Schematic drawing - not to scale

Cawston XL Matt Black & Polished Copper Lampshade Pendant Light - 14 Inch

SPECIFICATIONS

BULB
E27-230v / E26-110v

WIRING
Hardwired mains connection

MAXIMUM WATTAGE
60W

LAMPHOLDER OPENING
40mm

INFORMATION

MATERIAL
Solid copper

FINISH
Matt Black

HANDMADE TO ORDER
Please allow 10 - 14 days for dispatch. We always aim to ship sooner, but please bear this in mind when ordering.

USA ORDERS
110V E26 bulb required

DIMENSIONS

SHADE DIAMETER
35.5cm / 14 inches

SHADE HEIGHT
22cm / 8.5 inches

CABLE LENGTH
140cm, adjustable during installation

CEILING ROSE DIAMETER
10cm