PRODUCT SPECIFICATION

BLACK

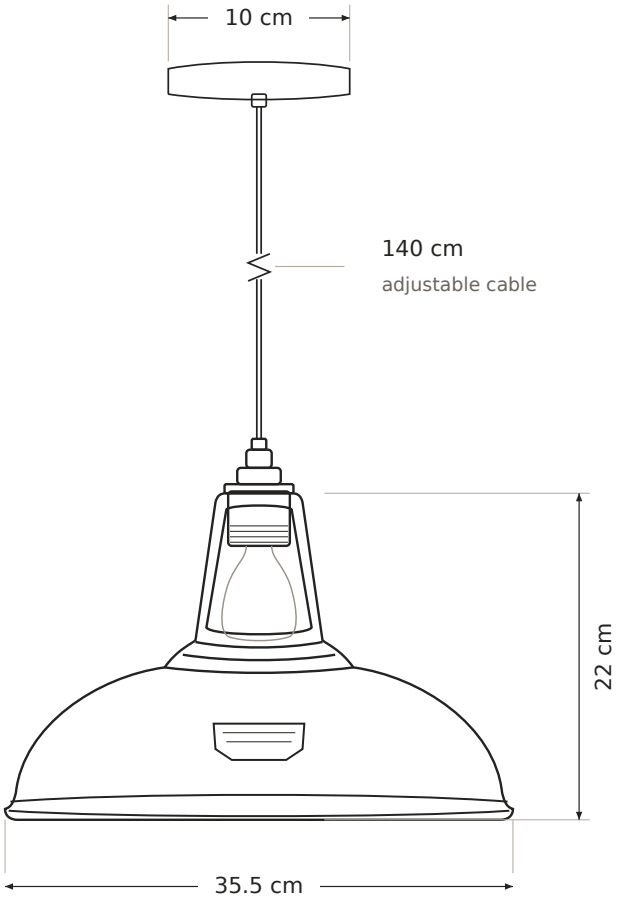

Schematic drawing - not to scale

Cawston XL Midnight Black Coolicon Lampshade Pendant Light - 14 Inch

SPECIFICATIONS

BULB
E27-230v / E26-110v

WIRING
Hardwired mains connection

MAXIMUM WATTAGE
60W LED

LAMPHOLDER OPENING
40mm

ADD A BULB
40W Filament Bulb / No Bulb

INFORMATION

MATERIAL
Steel with a black enamel finish

USA ORDERS
110V E26 bulb required

COLOUR / FINISH
Black

CHOOSE YOUR FITTING
Shade & Pendant Set / Shade Only

DIMENSIONS

SHADE DIAMETER
35.5cm / 14 inches

SHADE HEIGHT
22cm / 8.5 inches

CABLE LENGTH
140cm, adjustable during installation

CEILING ROSE DIAMETER
10cm