PRODUCT SPECIFICATION

PEWTER GREY

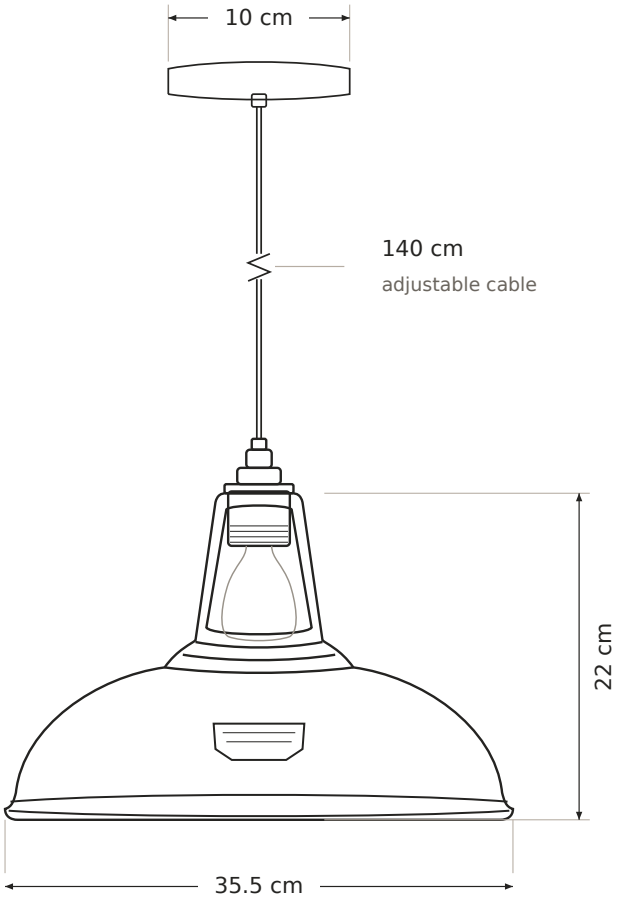

Schematic drawing - not to scale

Cawston XL Pewter Grey Coolicon Lampshade Pendant Light - 14 Inch *Factory Second*

SPECIFICATIONS

BULB
E27-230v / E26-110v

WIRING
Hardwired mains connection

MAXIMUM WATTAGE
60W LED

LAMPHOLDER OPENING
40mm

INFORMATION

MATERIAL
Handspun steel with a pewter grey finish

FINISH
Pewter Grey

CONDITION
Factory second

USA ORDERS
110V E26 bulb required

DIMENSIONS

SHADE DIAMETER
35.5cm / 14 inches

SHADE HEIGHT
22cm / 8.5 inches

CABLE LENGTH
140cm, adjustable during installation

CEILING ROSE DIAMETER
10cm