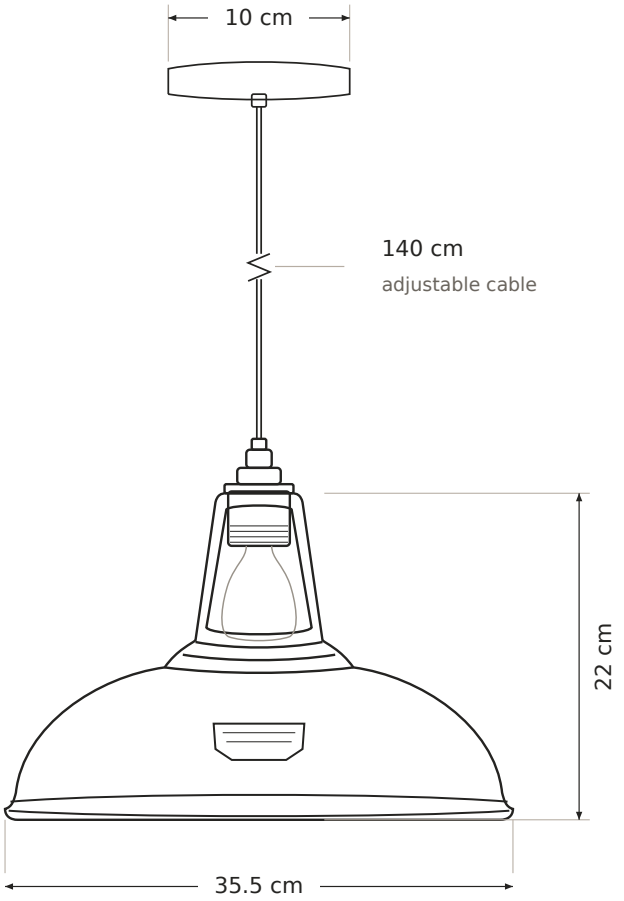

Schematic drawing - not to scale

Cawston XL Racing Green Coolicon Lampshade Pendant Light - 14 Inch

SPECIFICATIONS

BULB FITTING
E27 for 230V installations

WIRING
Hardwired mains connection

MAXIMUM LAMP WATTAGE
60W

LAMPHOLDER OPENING
40mm

ADD A BULB
40W Filament Bulb / No Bulb

INFORMATION

MATERIAL
Handspun steel

FINISH
Racing green enamel exterior with white interior

US INSTALLATIONS
Suitable E26 110V bulb required

CHOOSE YOUR FITTING
Shade & Pendant Set / Shade Only

DIMENSIONS

SHADE DIAMETER
35.5cm / 14 inches

SHADE HEIGHT
22cm / 8.5 inches

CABLE LENGTH
140cm, adjustable during installation

CEILING ROSE DIAMETER
10cm