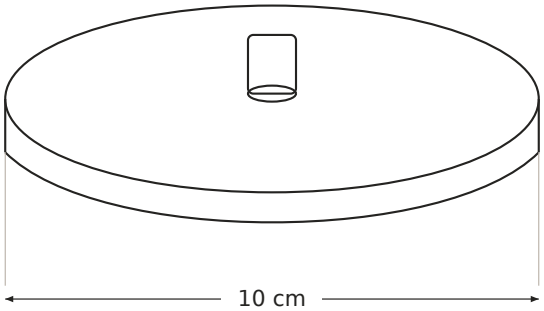

Schematic drawing - not to scale

Solid Brass Ceiling Rose 100mm 1 Outlet

SPECIFICATIONS	INFORMATION	DIMENSIONS
PRODUCT TYPE Ceiling rose	MATERIAL Solid Brass	DIAMETER 10cm
	DETAIL Solid brass ceiling rose	HEIGHT 2cm